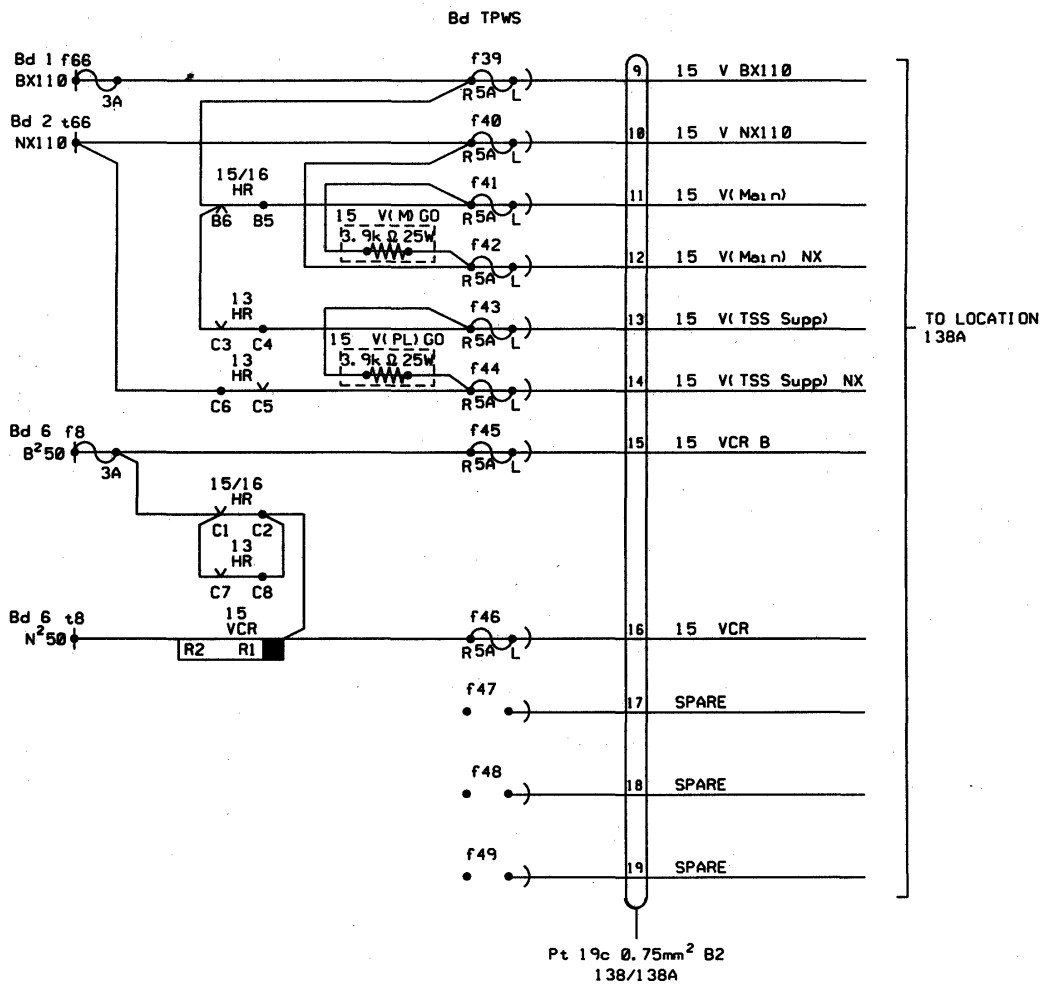

ALL INTERNAL WIRING TO BE 0.75mm² TYPE A1 UNLESS OTHERWISE STATED

Source Record Updated		
Version	Prod.	Check
AP1	AMW	ANB
AP2	AMW	ADB

Produced	AMW	15/1/02
Checked	ADB	16.1.02
Issued		

Railtrack Records Group

GILLINGHAM

15 TPWS CONTROL CIRCUIT

RAILTRACK

Drawing No
1926E-103

Last Full Correlation	Date	
	Version	
Current Version	AP2	

CAD GENERATED : ALTERATIONS TO BE MADE ON DESIGN FILE ONLY

CAD - A3